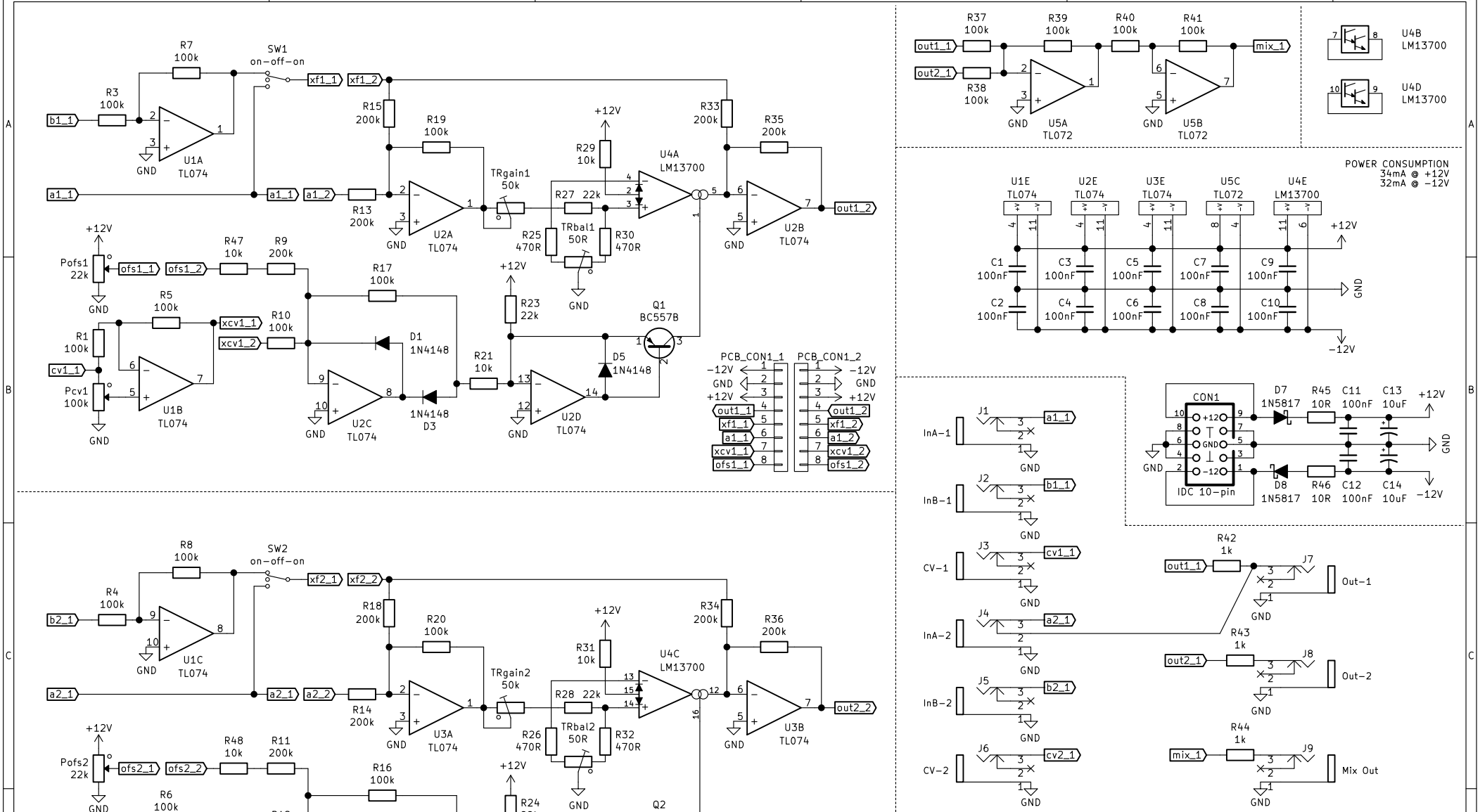

CALIBRATION
Patch unconnected cable to InA-2.
Adjust TRbal for symmetry and minimum CV leak-through.
Adjust TRgain so that B input is not audible in xfade mode with Pofs at 100%
Repeat until satisfaction.

Kymatica Devices

Sheet: /
File: VCA_XF_RM.sch

Title: 2xVCX

Size: A4	Date: 2016-11-25	**Rev: 1.0**
KiCad E.D.A. kicad (2016-09-30 revision 278ee7d)-master		Id: 1/1