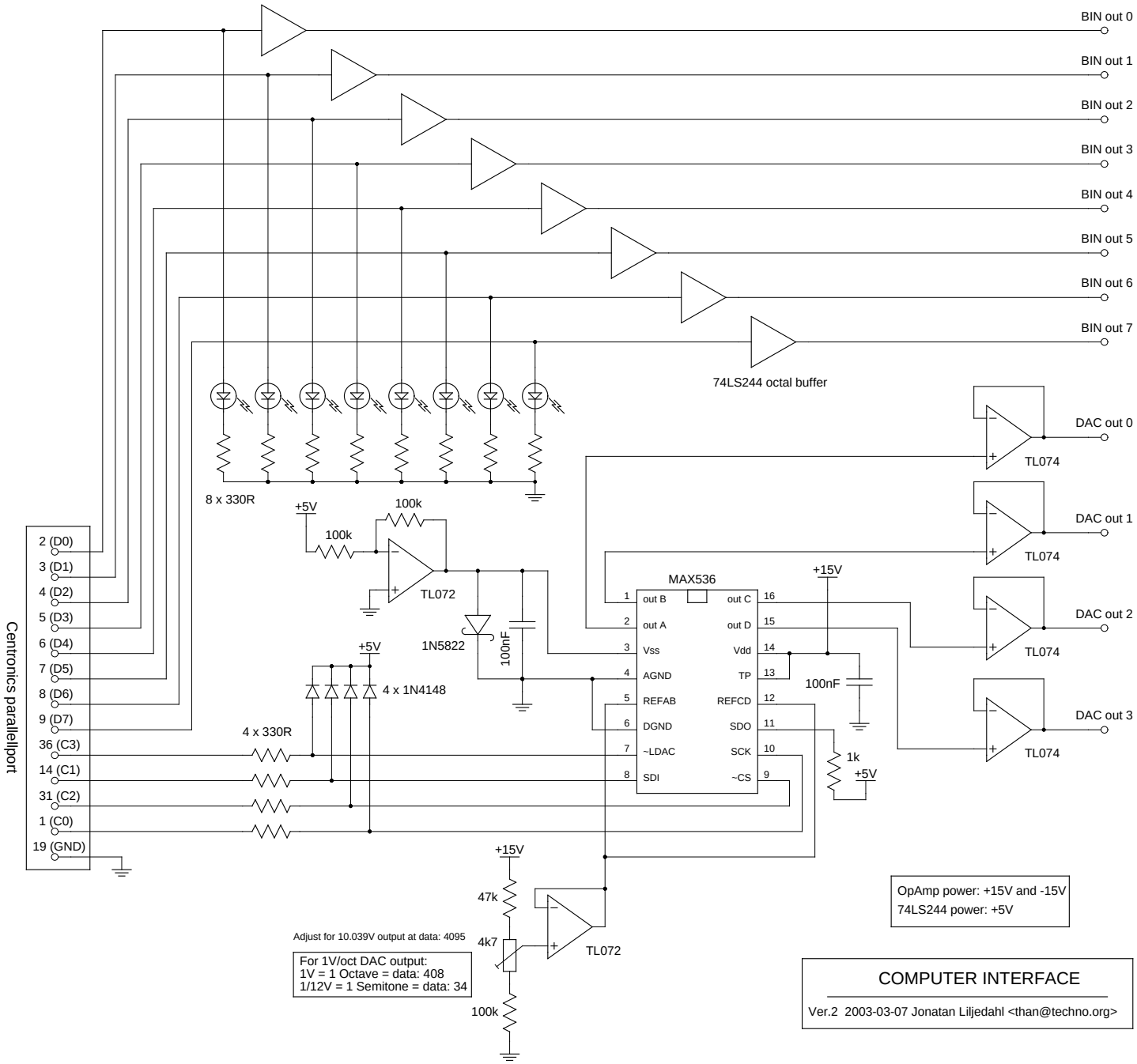
BIN out 0
BIN out 1
BIN out 2
BIN out 3
BIN out 4
BIN out 5
BIN out 6
BIN out 7
74LS244 octal buffer
8 x 330R
DAC out 0
DAC out 1
DAC out 2
DAC out 3
TL074
TL074
TL074
TL074
+5V
100k
100k
TL072
1N5822
100nF
+5V
4 x 1N4148
4 x 330R
MAX536
+15V
100nF
1k
+5V
out B
out A
Vss
AGND
REFAB
DGND
~LDAC
SDI
out C
out D
Vdd
TP
REFCD
SDO
SCK
~CS
Centronics parallelport
2 (D0)
3 (D1)
4 (D2)
5 (D3)
6 (D4)
7 (D5)
8 (D6)
9 (D7)
36 (C3)
14 (C1)
31 (C2)
1 (C0)
19 (GND)
+15V
47k
4k7
100k
TL072
Adjust for 10.039V output at data: 4095
For 1V/oct DAC output:
1V = 1 Octave = data: 408
1/12V = 1 Semitone = data: 34
OpAmp power: +15V and -15V
74LS244 power: +5V
COMPUTER INTERFACE
Ver.2 2003-03-07 Jonatan Liljedahl <than@techno.org>